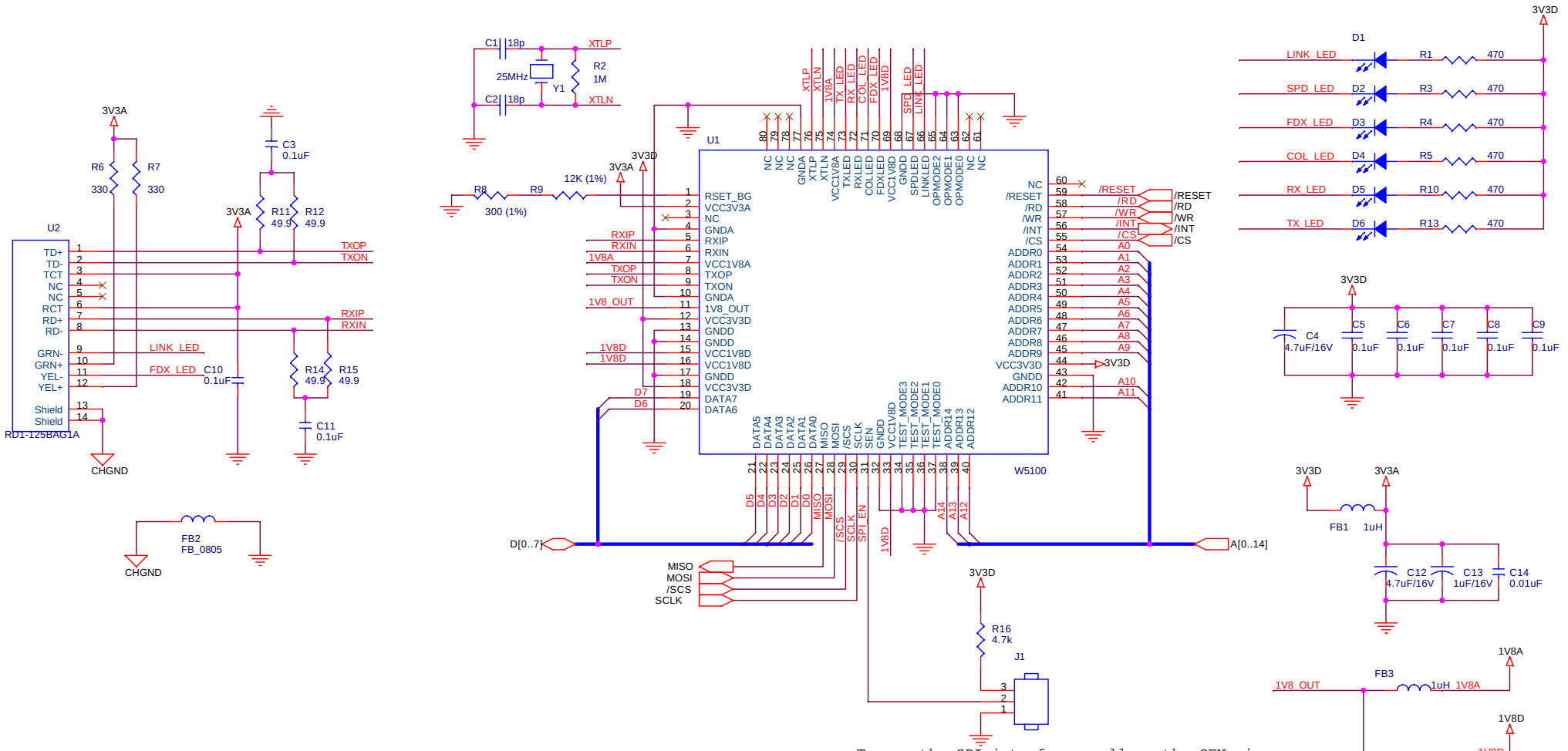

Title	W5100 Reference schematic (use MAG JACK)
Size B	Document Number <Doc>
Rev 2.0	
Date: Friday, February 09, 2007	Sheet 1 of 1