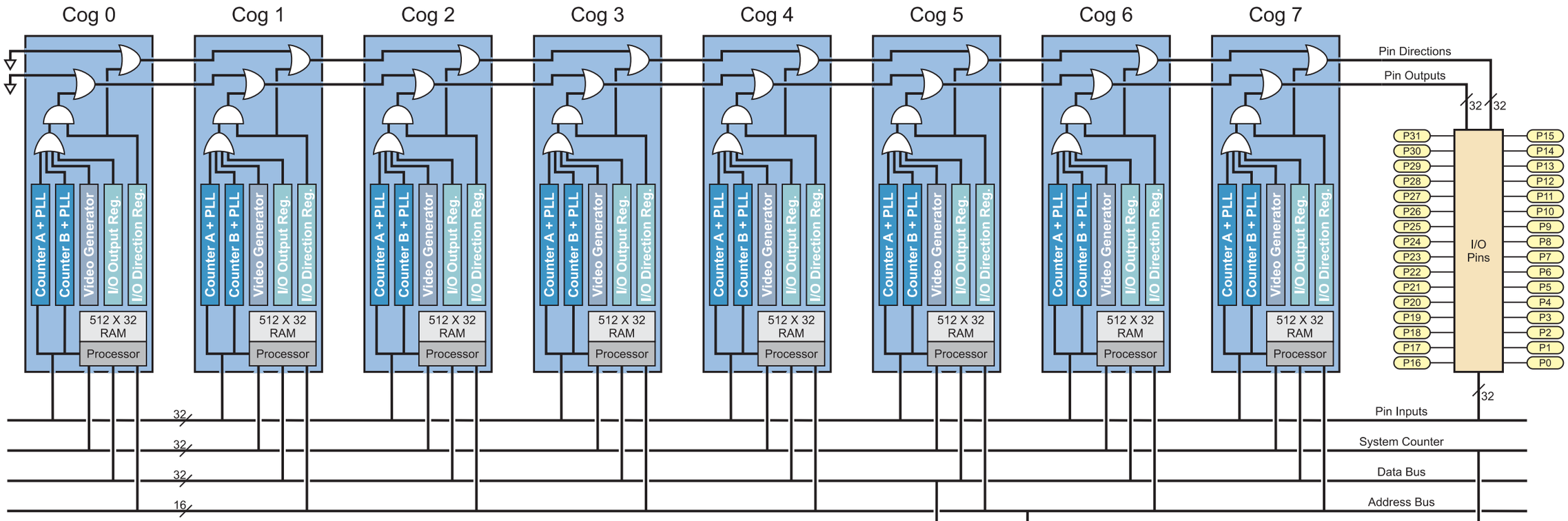

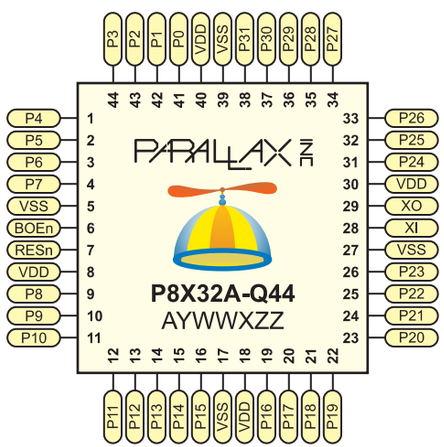

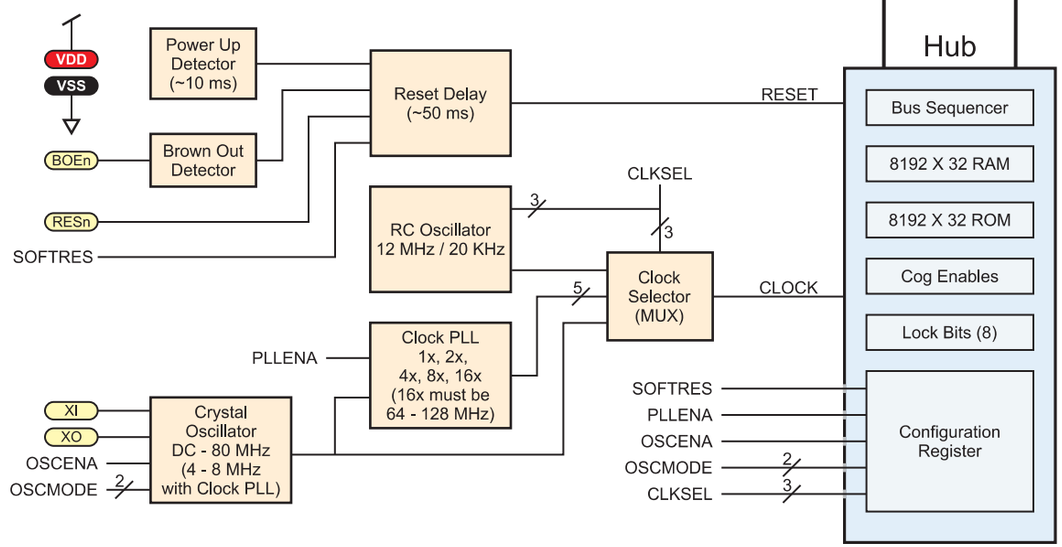

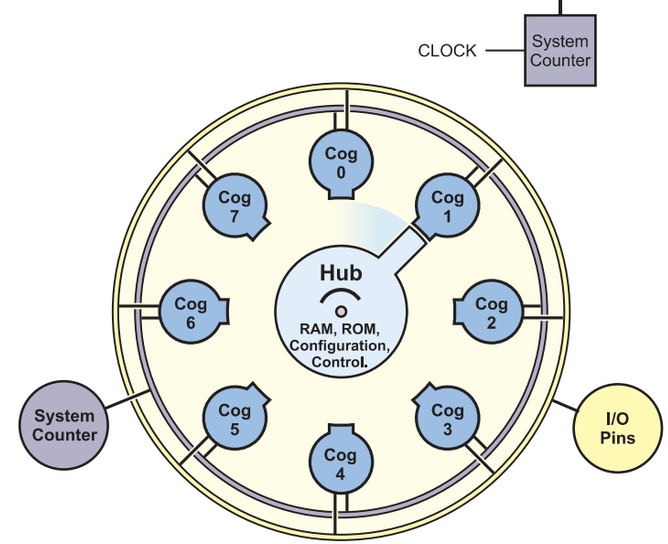

Hub and Cog Interaction